EGTK/OXF
OXFORD

JEPPESEN
1 OCT 21
Eff 7 Oct
(11-1)
CAT A, B & C

OXFORD, UK
❶NDB ILS DME or NDB LOC DME Rwy 19

BRIEFING STRIP ™

*ATIS	*OXFORD Approach(R)	*OXFORD Tower	*Ground
136.230	125.090	133.430	121.955

LOC IOXF	Final Apch Crs	D4.7 IOXF	ILS DA(H)	Apt Elev 263′
*108.35	191°	1800′(1542′)	458′(200′)	Rwy 258′

MISSED APCH: Climb STRAIGHT AHEAD to Lctr, continue climb on 166° from Lctr to D4.0 IOXF, then turn LEFT climbing to Lctr and hold at 2500′, or as directed.

180° 2200 270° 2300
MSA OX Lctr

Alt Set: hPa Rwy Elev: 9 hPa Trans level: By ATC Trans alt: 6000′

1. WARNING: NDB hold is impacted by EG(D)-129 and its use is subject to ATC.
2. Procedure restricted to MAX 185 KT. 3. ILS DME reads zero at rwy 19 threshold.

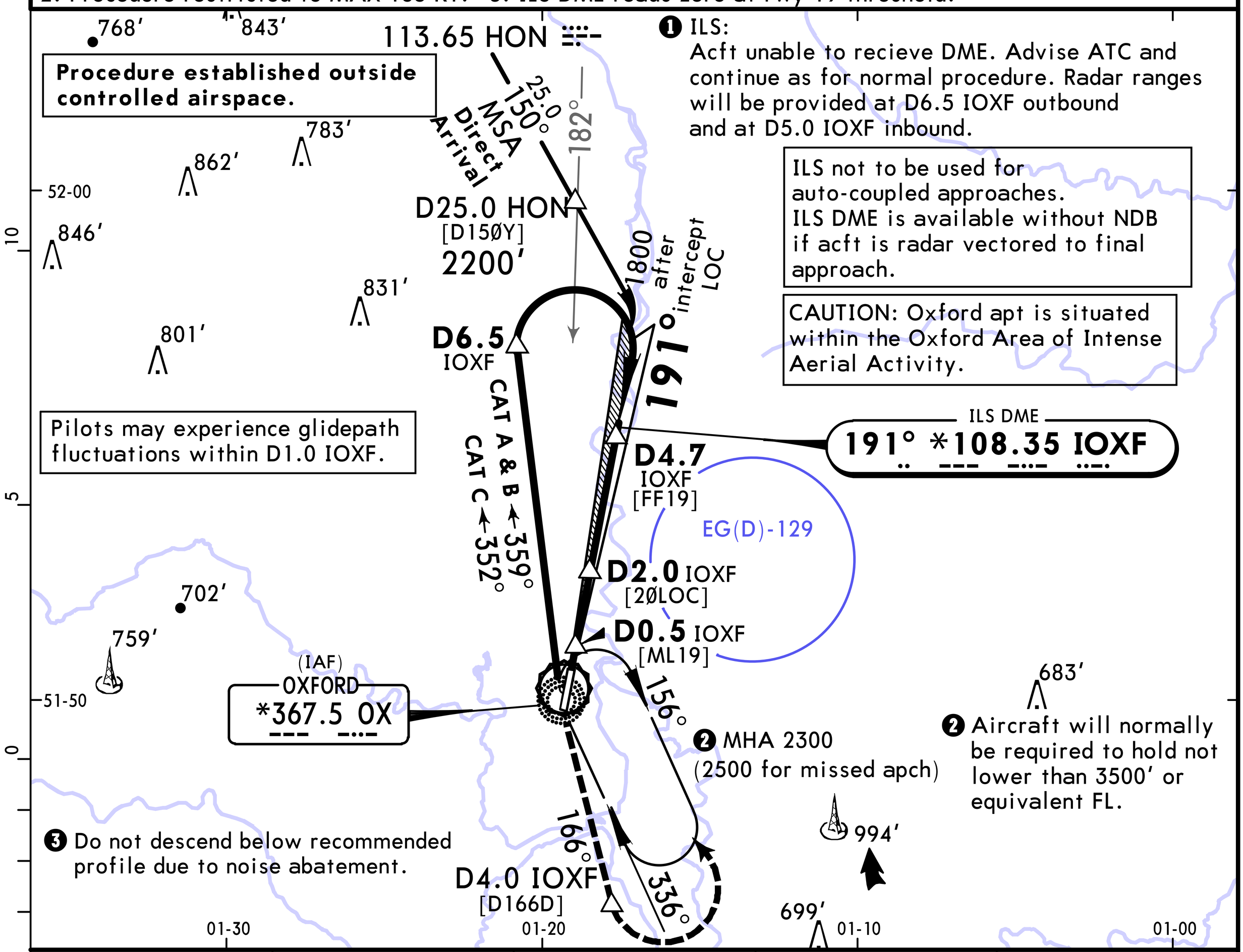

❶ ILS:
Acft unable to recieve DME. Advise ATC and continue as for normal procedure. Radar ranges will be provided at D6.5 IOXF outbound and at D5.0 IOXF inbound.

ILS not to be used for auto-coupled approaches.
ILS DME is available without NDB if acft is radar vectored to final approach.

CAUTION: Oxford apt is situated within the Oxford Area of Intense Aerial Activity.

ILS DME
191° *108.35 IOXF

❷ MHA 2300
(2500 for missed apch)

❷ Aircraft will normally be required to hold not lower than 3500′ or equivalent FL.

❸ Do not descend below recommended profile due to noise abatement.

LOC (GS out)	❸ IOXF DME	2.0	3.0	4.0
	ALTITUDE	940′	1260′	1580′

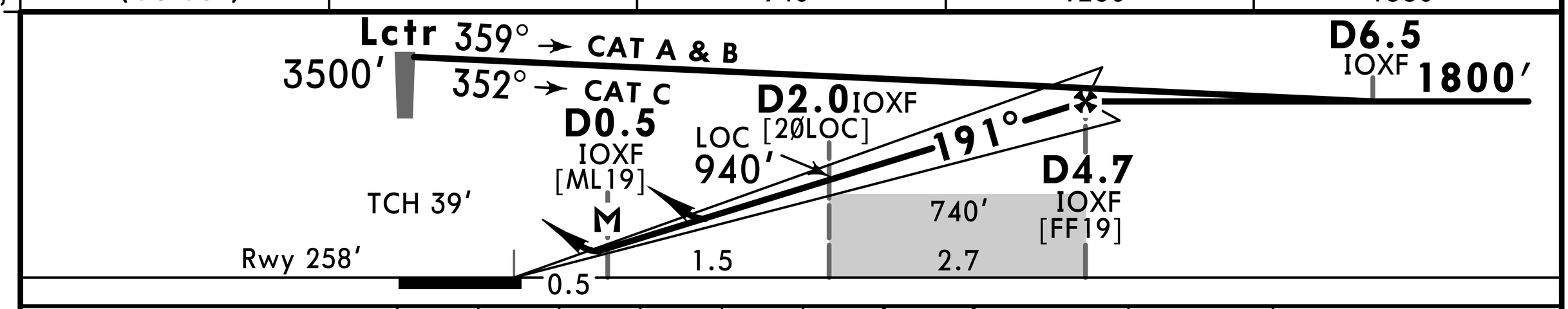

Gnd speed-Kts		70	90	100	120	140	160
ILS GS	3.00°	372	478	531	637	743	849
LOC Descent Angle	3.01°	373	479	532	639	745	852
MAP at D0.5 IOXF							

HIALS
PAPI
REIL

OX 367.5

D4.0 IOXF LT on 166° from 367.5 OX

Std/State

STRAIGHT-IN LANDING

	ILS FULL	ILS ALS out	LOC (GS out) CDFA	LOC (GS out) CDFA ALS out
	DA(H) 458′(200′)		❶ DA/MDA(H) 600′(342′)	
A	R750m	R1200m	R1200m	R1500m
B				
C				R1600m
D	NOT APPLICABLE			

CIRCLE-TO-LAND

Max Kts	MDA(H)	
100	800′(537′)	V1500m
135	800′(537′)	V1600m
180	1100′(837′)	V2400m
D	NOT APPLICABLE	

PANS OPS

❶ VNAV DA(H) in lieu of MDA(H) depends on operator policy.

CHANGES: Caution note.

© JEPPESEN, 2007, 2021. ALL RIGHTS RESERVED.